RGC | BOAT LIFTS AND DOCKS

REIMANN&GEORGER CORP.

RGC MARINE

RGC MARINE

Trusted for the Most Extreme Environments.

For over 75 years, RGC has set the standard in the marine industry by offering boat lifts that combine unmatched durability, expert engineering, and customer support that goes the extra mile. Our long-standing experience ensures we understand the evolving needs of boat owners, allowing us to create products that are built to last and designed to perform even in the toughest conditions.

At RGC, we take pride in delivering more than just a product. Our boat lifts are designed for longevity and ease of use, and built with the highest quality materials, ensuring you get the most out of your waterfront experience. But what truly sets us apart is our commitment to superior customer service—providing you with expert guidance, fast response times, and support that delivers beyond expectations.

Why Choose RGC?

Unmatched Durability: Our boat lifts are engineered to endure the harshest marine environments and provide long-lasting performance.

Industry-Leading Experience: With over 75 years of innovation and expertise, RGC leads the market with trusted solutions.

Exceptional Customer Service: We're here to support you at every step—from installation to long-term maintenance.

Discover why RGC is the first choice for boat owners and marinas seeking reliability, performance, and peace of mind.

Marine products built to last since 1946

Table of Contents

FLEX™ Hydraulic Boat Lifts.....4 - 5
Hydraulic Vertical Boat Lifts.....6
Vertical Boat Lifts.....7
Pontoon and Tritoon Boat Lifts.....8 - 9
Hydraulic Platform and Seaplane Lifts.....10
Boat Lift Accessories.....11
Personal Watercraft Lifts.....12 - 13
Boat Lift Canopies.....14 - 15
Premium Docks.....16 - 17
Specifications.....18 - 19

PREMIUM *Flex*™ SERIES

★★★★★

EFFICIENCY, PERFORMANCE, RELIABILITY

Introducing the all new FLEX™ X2 Hydraulic Boat Lift. We've reengineered the FLEX™ hydraulic lift to bring you a premium high capacity lift that features exceptional performance, improved efficiency, and extreme durability.

FLEX™ Hydraulic Boat Lift

Premium performance and extreme durability in an all new efficient design.

NEW! FLEX™ X2
2-Cylinder 10k lb. FLEX™ Boat Lift

The RGC FLEX™ hydraulic lift delivers unmatched durability and reliability, and it still gets better. Introducing the FLEX™ X2, the latest evolution of our most popular boat lift. The X2 lifts 10,000 lbs. with only 2 hydraulic cylinders*, setting a new benchmark in marine lifting technology. The streamlined design of this high capacity lift provides increased efficiency, peak performance, and fewer parts, delivering unparalleled convenience and value. The entire FLEX™ series, spanning from 6,000 lbs. to 36,000 lbs., features perfect hull fit and enhanced components for effortless operation and maximum protection. Whether you're lifting a small cruiser or a 30,000 lb. yacht, you can rely on the FLEX™ to stand up to the toughest marine environments. Take your boating experience to the next level with a FLEX™ hydraulic lift!

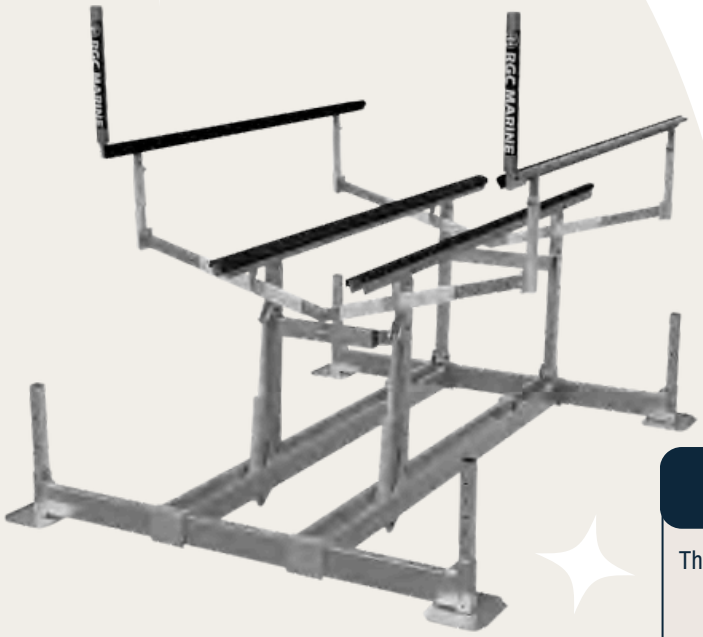

Lift Mechanism: Hydraulic **Power source:** Hydraulic Pump **Design:** Cantilever

Dependable Reliability | *Superior Durability* | *Effortless Operation* | *Ultimate Convenience*

Capacity: 6,000 lbs. to 36,000 lbs.

Must Haves

- Fast, quiet lifting at the push of a button
- Convenient operation from a distance
- Solar ready for safe, clean power

*10,000 lbs. capacity at 60-inch lift height

Extreme Durability

Thoughtfully engineered, precise construction, and the highest quality components for maximum durability and reliability.

- 6061-T6 Marine Grade Aluminum resists corrosion
- Minimum tube thickness of .25" for superior strength
- Stainless-steel cylinders & fittings for longer life
- Stainless-steel braided hoses resist abrasion and cutting
- Welded frame construction is more reliable and requires less maintenance
- Aluminum/vinyl bunks cushion and protect your boat

Maximum Performance

The FLEX™ X2, 2-cylinder 10k hydraulic boat lift is a revolutionary design that maximizes efficiency, performance, and convenience.

- Dual Cylinder Design lifts up to 12,000 lbs. for higher capacity and increased efficiency
- Superior performance provides fast, smooth, reliable lifting for the ultimate convenience
- Faster assembly and installation so you're ready for action in no time
- Streamlined design has fewer parts and less hardware for simplified, low-maintenance ownership
- This high functioning boat lift can do more with less, maximizing the overall value

Superior Hydraulics

RGC's high functioning FLEX™ series begins with superior cylinders, upgraded components and adjustability for the ultimate performance.

- Upgraded hydraulic cylinders feature bronze scrapers for performance and longevity
- Stainless-steel components for durability
- Corrosion and water-resistant pump provides reliable, consistent power
- Lithium battery ready for longer life and higher capacity
- Adjustable width bunks for precise fit
- Lateral Adjustment for customized positioning to your dock
- Height Adjustment accommodates varying water depths

Hydraulic Vertical Lift

The speed and convenience of hydraulics with adaptability.

The RGC Hydraulic Vertical Lift (HVL) offers unmatched speed and reliability at the push of a button. Its innovative hydraulic system pulls cables instead of winding them, significantly reducing wear and maintenance. The HVL's vertical design adapts seamlessly to varying water depths, making it perfect for environments with fluctuating water levels. Its compact footprint makes it an ideal choice for space-constrained docks. For an elevated boating experience, make the HVL the next addition to your waterfront.

Lift Mechanism: Hydraulic Cable Driven **Power source:** Hydraulic Pump **Design:** Vertical Freestanding

Extreme Durability

Easy Operation

Low Maintenance

Fast Lifting

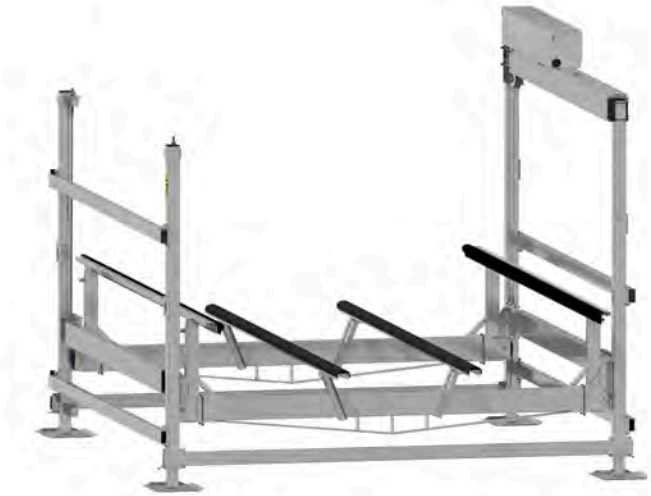

Convenience you deserve

- Hydraulic power provides fast, quiet lifting at the push of a button
- Solar ready for safe, clean power
- Remote controls provide convenient operation from a distance
- Cables are pulled rather than wound for longer life & less maintenance
- Hydraulic cylinder sits above the water for easy inspection & maintenance
- Welded frame construction provides maximum strength

Capacity: 5,000 lbs. to 10,000 lbs.

Vertical Boat Lift

Versatility and durability that stands the test of time.

The Vertical Aluminum Boat Lift (VL) is a solid investment that you can rely on to handle the most demanding marine environments and last through years of use. Designed for durability and ease of use, this versatile lift offers convenience, reliability, and adaptability. The VL accommodates fluctuating water levels, tight spaces, and a variety of other waterfront characteristics letting you customize it to your unique needs and budget. Take your boating experience to the next level with the Vertical Aluminum Boat Lift.

Lift Mechanism: Cable Driven **Power source:** Direct Drive, Handwheel **Design:** Vertical Freestanding

Excellent Durability

Easy Operation

Versatility

Highly Customizable

Reliability you can trust

- Welded Marine Grade Aluminum frame is durable and resists corrosion
- Easy to assemble, install and adjust. No special tools required.
- Simple, reliable lifting whether powered or manual
- Shallow water ready with a minimum platform height of 8.5"
- Tremendous lifting height up to 80" accommodates a variety of applications
- Accommodates shallow water, fluctuating water and deep water levels
- Small footprint -- ideal for space limited locations
- Customize to fit your unique needs:
  - Choose your power drive, bunk and leg options, and accessories.

Capacity: 1,250 lbs. to 10,000 lbs.

BIG LIFT? NO PROBLEM.

★★★★★

EFFORTLESS LIFTING AND LONG LASTING SUPPORT

RGC Pontoon Lifts provide reliable support and easy operation to save you time and energy. Specifically designed to support pontoons and tritoons, our lifts provide maximum durability.

Pontoon and Tritoon Lifts

Extreme Durability and Easy Operation for Pontoons and Tritoons.

Experience unparalleled support and protection for your pontoon and tritoon boats with RGC high-performance lifts. Engineered for both stability and durability, RGC Pontoon lifts are specifically designed to match the unique characteristics of your pontoon or tritoon, ensuring effortless, reliable lifting and lowering. Constructed from corrosion-resistant materials, these lifts are built to endure the toughest marine environments and weather conditions. With their smooth operation, our pontoon lifts simplify the docking and storage of your large watercraft, providing peace of mind and lasting protection. Choose the pontoon lift that goes beyond expectations and elevate your boating experience today.

Reliable Support

Extreme Durability

Effortless Operation

Easy Docking

FLEX Hydraulic

The FLEX™ Hydraulic Pontoon Lift features adjustable width bunks and toon size adjustments for the perfect fit and maximum support for any sized pontoon.

- Marine Grade Aluminum resists corrosion and welded frames provide excellent durability and longevity
- Adjustable width bunks for perfect toon fit and excellent support while protecting the toons
- Upgraded Stainless-steel cylinders & components inhibit corrosion and last longer
- Hydraulic power provides fast, smooth, quiet lifting at the push of a button
- Easy operation from a distance for the ultimate convenience

Capacity: 6,000 lbs. to 12,000 lbs.

Hydraulic Vertical

The Hydraulic Vertical Pontoon Lift provides fast, easy lifting in a versatile design. This lift is ideal for a variety of water depths and locations.

- Marine Grade Aluminum resists corrosion and welded frames provide excellent durability and longevity
- Hydraulic Vertical design utilizes cables that are pulled, rather than wound for less maintenance and longevity
- Hydraulic power provides fast, smooth, quiet lifting at the push of a button
- Aluminum/vinyl bunks cushion and protect your pontoon
- Excellent lifting range up to 80" make this lift ideal for a variety of water depths

Capacity: 5,000 lbs. to 10,000 lbs.

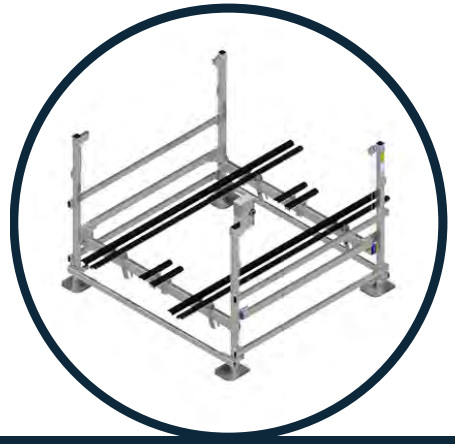

Vertical Lifts

The Vertical Pontoon Lift can be customized with your selection of power option, bunk style, legs and accessories to fit any waterfront need and budget.

- Marine Grade Aluminum resists corrosion and welded frames provide excellent durability and longevity.
- Easy to assemble, install and adjust
- Customize to suit your needs
- Easy to operate and own with minimal maintenance
- Accommodates shallow water, fluctuating water and deep water levels
- Small footprint – ideal for space limited locations

Capacity: 3,500 lbs. to 10,000 lbs.

Versatile Solutions

Reliable Convenience

Ultimate Durability

Hydraulic Platforms & Seaplane Lifts

Custom Solutions for Unique Applications - Lifts Aren't Just for Boats

RGC's Hydraulic Platform Lift combines the unmatched durability and convenience of our FLEX™ Hydraulic Lift with exceptional versatility, offering endless solutions for your waterfront. From seaplanes and PWCs to swim platforms and beyond, this lift adapts seamlessly. Experience the same smooth, effortless operation of hydraulics integrated into your dock, delivering a clean, functional, and stylish lift. Elevate your waterfront experience with RGC's Hydraulic Platform Lift.

Reliability and Convenience

- Fast, smooth, quiet lifting at the push of a button
- Durable marine grade aluminum frames are welded to resist corrosion and require less maintenance
- Upgraded stainless-steel components increase durability and longevity
- Poly decking is stain and fade resistant and requires minimal maintenance

Versatility

- All the benefits of our FLEX™ Hydraulic lift, with versatility to meet your unique waterfront needs
- Ideal for Seaplanes, PWC's, sundecks and more
- Streamlined design that integrates with your dock
- Suitable for shallow water depths and a variety of waterfront characteristics

Capacity: 6,000 lbs. to 7,000 lbs.

Boat Lift Accessories

Enhance Performance and Protect Your Investment with Quality Accessories

Maximize the efficiency and durability of your boat lift with RGC premium boat lift accessories. Engineered for reliability, our accessories improve lift function, simplify docking, and provide added protection for your boat. Whether it's hassle-free docking or maximum convenience, our accessories ensure your boat lift works effortlessly, offering peace of mind and superior performance. Make the most of your boating experience with an RGC boat lift accessory.

Full Guide-Ons
Durable aluminum and vinyl guides provide full length protection for effortless docking every time.

Wakeboard Guide-Ons
Vertical and full-length guide-ons combine for maximum protection and easy docking even in rough waters.

Vertical Guide Posts
Corrosion resistant PVC posts provide a visual and physical guide for novice and seasoned boaters alike.

Solar Panel
Choose Solar for the safest way to power your lift. Solar is easy, clean, and low-maintenance.

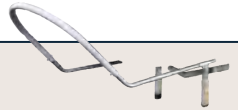

Bowstop
Securely positions your boat over the lift for a no-hassle docking experience.

Motor Stop
Keeps your boat properly positioned, safe and balanced on the lift.

Deep Water Extension Legs
Provide extra depth and support, with independent adjustability. Ideal for uneven and sloped lakebeds.

Screw Adjustable Legs
Make easy micro-adjustments to your lift height without the need for special tools.

Boat Lift Transport Kit
Poly wheels move smoothly over uneven terrain for hassle-free installation and removal.

Drive Options:

VLDD Electric Power Drive
AC or DC power provides effortless operation and easy, reliable lifting. Add remote control option for maximum convenience.

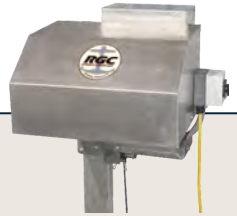

R18LT Patented Winch
RGC's patented winch sports an 18:1 ratio for smooth, easy lifting and lowering of your boat.

Extreme Max Power Drive
This direct drive power option works seamlessly with the RGC R18 winch for fast, easy lifting.

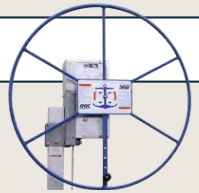

Manual Handwheel
RGC handwheels are an easy, reliable option to raise and lower smaller boats and PWCs with ease.

GOOD THINGS COME IN SMALL PACKAGES

★★★★★

SAFE, CONVENIENT, RELIABLE STORAGE FOR YOUR PWC

RGC PWC Lifts keep your jet ski or small boat protected from the elements. With three styles to choose from, our PWC lifts provide excellent durability to match any need, style, and budget.

PWC & Small Craft Lifts

Heavy Duty Protection and Security for your jet ski or small boat.

RGC PWC lifts are engineered with premium components for exceptional durability and performance. Designed for long-lasting, low-maintenance operation, our PWC lifts are the ideal choice for both residential and commercial settings. Providing stability and reliable protection, these lifts accommodate jet skis and small boats. Whether you're a casual weekend enthusiast or an avid water sports lover, we have three distinct styles to fit a variety of needs and budgets. Explore our range and discover how an RGC lift can take your waterfront experience to new heights.

Dependable Protection

Versatile Applications

Easy Operation

Customize to your needs

Hydraulic

The RGC Hydraulic PWC Lift combines speed, durability, and convenience to deliver the high performance you demand.

- Marine grade aluminum frame is welded for excellent durability and minimal maintenance
- The single hydraulic cylinder delivers superior performance while simplifying installation
- Upgraded stainless-steel components provide superior durability and longevity
- Fast, smooth, quiet lifting at the push of a button
- Ultimate convenience for the most discerning customer
- Ideal for a variety of water depths including shallow water

Capacity: 2,000 lbs.

Vertical

Customize this lift to meet your unique waterfront needs, style, and budget. This Vertical Lift delivers reliable durability and performance.

- Marine grade aluminum frame is welded for top strength and minimal maintenance
- Easy assembly and installation without the need for special tools
- Customize to fit your unique needs and budget
- Stainless-steel cables and hardware resist corrosion and lasts longer
- Small footprint makes this lift ideal for space limitations
- Ideal for deep, shallow, and fluctuating water depths

Capacity: 1,250 lbs. to 2,000 lbs.

Cantilever

The Cantilever Lift provides simplified assembly, installation, and operation at an attractive price. It's no wonder the cantilever is an easy choice.

- Marine grade aluminum frame is welded for top strength and minimal maintenance
- Easy assembly, installation, and adjustability
- Equipped with 30" RGC handwheel and a set of 4 adjustable legs
- Ability to mount winch and handwheel on either side of the lift for maximum flexibility
- Ideal for jet skis and small boats

Capacity: 1,000 lbs. to 1,200 lbs.

BOAT LIFT CANOPIES

★★★★★

RELIABLE COVER, LASTING PROTECTION

RGC Boat Lift Canopies offer unmatched durability that's been trusted in the toughest marine environments for decades. Choose from two stylish designs for reliable coverage that meets a variety of preferences and needs.

Canopy Features

- RGC Canopy frames are designed and built for superior durability and stability to withstand harsh weather elements
- Marine grade aluminum construction resists corrosion and provides long lasting appeal
- Quicklash™ fabric attachment system allows easy installation and removal from frame
- Sunbrella® fabric is stain and fade resistant, requires minimal maintenance, and stays looking new season after season
- Open end allows more air flow to prevent moisture build up while keeping your boat fully covered
- Optional Sidewall Extensions provide added protection
- Easy assembly, installation, and removal
- Extra bracing adds stability for longer length canopies

Boat Lift Canopies

The Ultimate protection for your boat in 2 Styles

Extreme Durability

Maximum Protection

Quicklash™ Attachment

Low Maintenance

RGC Boat Lift Canopies are designed for exceptional durability and long-lasting performance. Featuring high quality materials, our canopies provide reliable coverage, while maintaining a stylish appeal. Whether you prefer a classic or streamlined look, RGC boat canopies will keep your boat protected and enhance the look of your waterfront season after season.

Apex Canopy

The Apex Canopy features a streamlined, modern design that is the perfect compliment to a variety of waterfronts.

- Features a streamlined, modern design
- Sunbrella® fabric is fade resistant, so it stays looking new season after season
- Leg Extensions for deep water depths

Lengths: 25 ft. to 38 ft. (124 in. to 132 in. wide)

Traditional Canopy

The RGC Traditional Canopy with straight or scalloped edge provides a classic look that stands the test of time.

- Available in your choice of straight or scalloped edge
- Choose low maintenance Sunbrella® or vinyl fabric
- Open end provides maximum air flow
- Leg Extensions for deep water depths

Lengths: 21 ft. to 32 ft. (108 in. to 132 in. wide)

Sidewall Extensions

Sidewall extensions provide extended protection to keep your boat safe from the harshest elements.

- Low maintenance Sunbrella® fabric is stain and fade resistant
- Screen provides maximum ventilation to prevent moisture build up and mold and mildew growth
- Easy attachment and removal with add-on loop

Lengths: 21 ft. to 32 ft. (108 in. to 132 in. wide)

Must Haves

- Add Sidewall Extensions for added protection
- Seagull Eliminator keeps pesky seagulls at bay
- Extra bracing adds stability on longer lengths
- Leg extensions for deep water depths

Standard Colors:

Black	Forest Green	Pacific Blue	Cadet Grey	Heather Beige	Slate

MARINE DOCK SYSTEMS

Premium Dock Features:

- Premium Dock frames are designed and built for maximum stability, durability and longevity
- Lightweight for easy installation, adjustments, and removal each season
- The EasyTrack™ system makes installation, adjustments, and removal fast and easy with no tools required
- Configure as a stationary, roll in, or floating dock
- Customize with our large selection of premium dock furniture and accessories using the EasyTrack™ system
- Drop-in decking for easy installation, removal, upkeep,and upgrades

★★★★★

A DOCK SYSTEM DESIGNED FOR YOUR LIFESTYLE

Experience the perfect combination of strength, customization, and style. Designed for maximum stability and effortless installation, the Premium Dock with EasyTrack™ provides a seamless solution to elevate your waterfront.

Premium Docks with EasyTrack™

A Dock Solution That's Easy, Reliable, and Beautiful

RGC's Premium Docks, featuring the innovative EasyTrack™ system, offer a versatile solution for any waterfront. Whether you're outfitting a residential dock or a commercial marina, our Premium Docks are designed for seamless customization. The EasyTrack™ system allows you to quickly connect sections and attach accessories without drilling or hard bolting, for effortless installation. This system not only saves time but also provides unmatched flexibility, letting you easily adapt your dock as your needs change. Built for durability and convenience, RGC's Premium Docks combine style and functionality for a wide range of waterfront needs. Upgrade your property with an RGC Premium Dock today.

Superior Stability

Premium Durability

Portable & Stackable

Sectional Roll In Floating

Maximum Convenience:

EasyTrack™ Section Connection for fast, simple dock installation with no tools required.

EasyTrack™ Accessory Brackets let you install accessories like furniture quickly and easily without tools.

Screw Adjustable Legs let you quickly level your dock without getting into the water.

T9 Truss Style

The T9 Dock features a truss stringer frame which provides extreme strength and maximum stability in a lightweight design.

- The sturdy marine grade aluminum truss stringer frame is highly durable and stable
- The truss design allows the waves to flow through while maintaining a stable walking surface
- Lightweight design for fast, easy installation and removal each season

S6 Solid Side

The S6 Dock features a 6-inch solid sided aluminum frame for maximum strength and durability making it a top choice for a variety of waterfronts.

- Solid 6-inch aluminum side frame provides extreme strength, durability, and stability
- Ideal for both commercial and residential use
- Large selection of section sizes and shapes for limitless configurations and customization

Premium Accessories

RGC's large selection of dock decking and accessories allows you to personalize your dock for maximum functionality and comfort.

- EasyTrack™ makes adding, moving, and removing accessories a breeze with no tools required
- Easy assembly, installation, and adjustability
- Customize your dock to your unique needs with our stylish Homecrest Dock furniture, stairs, ladders, kayak rack and more.

Boat Lift Specifications

Find the boat lift and dock that perfectly suits your needs.

	MODEL	WEIGHT CAPACITY (LBS.)	MAXIMUM BEAM LENGTH (IN.)	FRAME WIDTH (IN.)	FRAME LENGTH (IN.)	MAXIMUM LIFTING HEIGHT (IN.)	MINIMUM BUNK HEIGHT (IN.)	HYDRAULIC CYLINDERS/ WINCH MODEL	PIVOTING BUNKS	FULL GUIDE -ONS	WAKE-BOARD GUIDE-ONS	VERTICAL GUIDE POSTS	EXTENSION LEGS	SCREW ADJUSTABLE LEGS	SOLAR PANEL	CONTROL BOX/ BATTERY SHELF	BOW STOP	MOTOR STOP	PONTOON CRADLE KIT	TRANSPORT KIT
FLEX™ HYDRAULIC BOAT LIFTS	HLF 60112	6,000	112	129	151	48	29	2	n/a	✓	✓	✓	✓	•	✓	✓	✓	✓	✓	•
	HLF 60120	6,000/5,500/4,000	120	137	151	48/60/72	29/30/31	2	n/a	✓	✓	✓	✓	•	✓	✓	✓	✓	✓	•
	HLF 70112	8,000/7,000	112	129	160	48/60	33/34	2	n/a	✓	✓	✓	✓	•	✓	✓	✓	✓	✓	•
	HLF 70120	8,000/7,000/5,000	120	137	160	48/60/72	33/34/35	2	n/a	✓	✓	✓	✓	•	✓	✓	✓	✓	✓	•
	HLF 80120	8,000	120	137	151	72	32	2	n/a	✓	✓	✓	✓	•	✓	✓	✓	✓	✓	•
	HLF 90120	10,000/9,000	120	137	151	48/60	31	2	n/a	✓	✓	✓	✓	•	✓	✓	✓	✓	✓	•
	HLF X2*	12,000/10,000/8,000	120	141	180	48/60/72	29/31/33	2	n/a	✓	✓	✓	✓	•	✓	✓	✓	✓	✓	•
	HLF 180144	20,000/18,000/15,000	144	164	220	52/60/72	36/37/38	4	n/a	✓	•	✓	✓	•	✓	✓	•	•	•	•
	HLF 240144	30,000/24,000/22,500	144	164	292	52/60/72	36/37/38	6	n/a	✓	•	✓	✓	•	✓	✓	•	•	•	•
	HLF 360144	40,000/36,000/30,000	144	164	292	52/60/72	36/37/38	8	n/a	✓	•	✓	✓	•	✓	✓	•	•	•	•
HYDRAULIC VERTICAL LIFTS	HVLS 50124/T	5,000	124	144	132	69/81	9	1	✓	✓	✓	✓	✓	•	✓	✓	•	✓	✓	•
	HVLS 70108T	7,000	108	124	138	81	11	1	✓	✓	✓	✓	✓	•	✓	✓	•	✓	✓	•
	HVLS 70124T	7,000	124	133	132	81	11	1	✓	✓	✓	✓	✓	•	✓	✓	•	✓	✓	•
	HVLS 80124T	8,000	124	144	138	81	10	1	✓	✓	✓	✓	✓	•	✓	✓	•	✓	✓	•
	HVLS 80132T	8,000	132	152	138	81	10	1	✓	✓	✓	✓	✓	•	✓	✓	•	✓	✓	•
	HVLS 10132T	10,000	132	152	138	81	10	1	✓	✓	✓	✓	✓	•	✓	✓	•	✓	✓	•
VERTICAL LIFTS	VL 35116	3,500	116	124	108	68	8	R18/Lorenz winch	✓	✓	✓	✓	✓	✓	✓	✓	•	✓	✓	✓
	VL 45108	4,500	108	116	116	68	8	R18 winch	✓	✓	✓	✓	✓	✓	✓	✓	•	✓	✓	✓
	VL 45116/T	4,500	116	124	116	68/80	8	R18 winch	✓	✓	✓	✓	✓	✓	✓	✓	•	✓	✓	✓
	VL 50124/T	5,000	124	133	132	68/80	9	R18 winch	✓	✓	✓	✓	✓	✓	✓	✓	•	✓	✓	✓
	VL 60124/T	6,000	124	133	132	68/80	9	R18 winch	✓	✓	✓	✓	✓	✓	✓	✓	•	✓	✓	✓
	VLS 80124T	8,000	124	133	138	78	11	R18 winch	✓	✓	✓	✓	✓	✓	✓	✓	•	✓	✓	•
	VLS 100132	10,000	132	147	158	78	13	R18 HD winch	✓	✓	✓	✓	✓	✓	✓	✓	•	✓	✓	•
PWC LIFTS	HL 20058	2,000	58	74	94	48	14	1	n/a	•	•	✓	✓	•	✓	•	✓	•	•	•
	HL 20065	2,000	65	81	94	48/60	14	1	n/a	•	•	✓	✓	•	✓	•	✓	•	•	•
	VL 1250	1,250	65	73	82	75	8.5	•	•	•	•	•	✓	•	✓	✓	•	•	•	•
	VL 16065	1,600	65	73	108	68	9	•	✓	✓	•	•	✓	•	✓	✓	•	✓	•	•
	VL 20100	2,000	100	108	108	68	9	•	✓	✓	•	•	✓	•	✓	✓	•	✓	•	•
	PL 1000	1,000	64	68	72	46	10	30" handwheel	•	•	•	•	•	•	•	•	•	•	•	•
	PL 1200	1,200	70	76	99	46	10	30" handwheel	•	•	•	•	•	•	•	•	•	•	•	•
RAILWAY LIFTS	AR 4000	4,000	Track Length: 40' Extra Track Length: 10'					Power Drive	•	•	•	•	•	•	•	•	•	•	✓	•
	AR 6000	6,000	Track Length: 40' Extra Track Length: 10'					Power Drive	•	•	•	•	•	•	•	•	•	•	✓	•
SEAPLANE PLATFORMS	Seaplane6k	6,000	Platform Sizes: 13' x 14', 13' x 16', 14' x 14'					2												
	Seaplane7k	7,000	Platform Sizes: 13' x 14', 13' x 16', 14' x 14'					2												
HYDRAULIC PLATFORM LIFTS	HL6K	6,000	Platform Sizes: 9' x 14', 10' x 12', 10' x 14'					2												
	HL7K	7,000	Platform Sizes: 9' x 14', 10' x 12', 10' x 14'					2												

**Beam widths of 132" and 144" also available. Please visit our website at rgcmarine.com for details.*

Dock Specifications

DOCK MODEL	TYPE	SIZE*	WEIGHT**	FRAME ONLY	POLY DECKING	ALUMINUM DECKING
T9 TRUSS FRAME	SECTIONS	2 x 8	51	✓	✓	✓
		2 x 16	86	✓	✓	✓
		4 x 8	67	✓	✓	✓
		4 x 12	88	✓	✓	▪
		4 x 16	110	✓	✓	▪
		4 x 20	132	✓	✓	▪
		6 x 12	114	✓	✓	✓
		8 x 8	107	✓	✓	✓
		8 x 12	142	✓	✓	▪
	CORNER	4 x 4	26	✓	✓	▪
	RAMPS	4 x 6	41	✓	✓	✓
		4 x 8	54	✓	✓	✓
		4 x 12	75	✓	✓	✓
		4 x 16	97	✓	✓	▪
S6 SOLID SIDE	SECTIONS	13" x 12	68	✓	✓	✓
		2 x 20	152	✓	✓	✓
		3 x 12	91	✓	✓	✓
		4 x 10	100	✓	✓	✓
		4 x 12	112	✓	✓	✓
		4 x 14	124	✓	✓	✓
		4 x 16	136	✓	✓	✓
		4 x 18	157	✓	✓	✓
		4 x 20	169	✓	✓	✓
		6 x 10	132	✓	✓	✓
		6 x 12	139	✓	✓	✓
		6 x 14	168	✓	✓	✓
		6 x 16	175	✓	✓	✓
		6 x 18	204	✓	✓	✓
		6 x 20	211	✓	✓	✓
		8 x 8	129	✓	✓	✓
		8 x 10	166	✓	✓	✓
		8 x 12	174	✓	✓	✓
		8 x 16	219	✓	✓	✓
		8 x 20	264	✓	✓	✓
	CORNER	4 x 4	31	✓	✓	✓
	RAMPS	4 x 6	41	✓	✓	✓
		4 x 8	54	✓	✓	✓
		4 x 12	75	✓	✓	✓
		4 x 16	97	✓	✓	▪

*Sizes listed are in feet unless otherwise noted. **Weight listed is for frame only (does not include decking)

^Additional Homecrest Furniture Available For Order

Canopy Specifications

α Features Sunbrella fabric for long lasting, stain and fade resistant canopy cover.

	SIZE	TRADITIONAL α	APEX α	OPEN-ENDED CANOPY α	SIDEWALL EXTENSIONS α	VINYL FABRIC	CANOPY OPTIONS:	TRADITIONAL	APEX
CANOPIES	21 ft. x 108 in.	✓	▪	▪	✓	✓	Seagull Eliminator Kit	✓	✓
	24 ft. x 108 in.	✓	▪	▪	✓	✓	Canopy Storage Shelf	✓	✓
	26 ft. x 108 in.	✓	▪	▪	✓	▪	Scalloped Edge	✓	▪
	24 ft x 116 in.	✓	▪	✓	✓	✓	Straight Edge	✓	▪
	26 ft x 116 in.	✓	▪	✓	✓	✓	Matching Trim	✓	▪
	28 ft x 116 in.	✓	▪	✓	✓	▪	Custom Logo	✓	▪
	24 ft x 124 in.	✓	▪	▪	✓	✓			
	25 ft. x 124 in.	▪	✓	▪	▪	▪			
	26 ft x 124 in.	✓	▪	✓	✓	✓			
	28 ft x 124 in.	✓	✓	✓	▪	✓			
	30 ft. x 124 in.	✓	▪	✓	✓	▪			
	32 ft x 124 in.	✓	▪	✓	✓	▪			
	33 ft. x 132 in.	▪	✓	▪	▪	▪			
	32 ft. x 132 in.	✓	▪	▪	✓	▪			
	38 ft. x 132 in.	▪	✓	▪	▪	▪			

Dock Accessories

ACCESSORIES	EASY TRACK™	BOLT-ON
Screw Adjustable Legs	▪	✓
Adjustable Legs	▪	✓
Stairs (3, 4, 5, 6, 8, & 10 steps)	▪	✓
Ladders (3-step, 4 step)	✓	▪
Homecrest Holly Hill Swivel Rocker Chair^	✓	▪
Homecrest Kashton Swivel Rocker Chair^	✓	▪
Homecrest 24" Latitude Table	✓	▪
Homecrest 18" Square Mesh Dock Table	✓	▪
Homecrest Folding Umbrella	✓	▪
Aluminum Bench	✓	▪
2-Unit Kayak/SUP Rack	✓	▪
Dock Cleats	▪	✓
Vertical Bumper	✓	▪
Corner Bumper	▪	✓
Dock Wheel Kit	▪	✓
Foot Plate	▪	✓
Accessory Socket for Round Posts	✓	▪
Float Kits	▪	✓

OUR QUALITY PLEDGE TO YOU

At RGC, quality is more than a word - it's a standard by which we promise to work. For over 7 decades, we have consistently manufactured the best products for the most demanding environments. From concept to creation, our products are innovative, efficient, and built to last. We continually invest in our processes, our technology and our people to deliver the highest caliber product to every customer worldwide.

WARRANTY

All RGC Marine Boat Lifts and Docks come with a 15-year limited warranty on aluminum materials and workmanship in fresh water applications.

Marine products built to last since 1946.

REIMANN AND GEORGER CORPORATION
1849 HARLEM ROAD | BUFFALO, NY 14212
1-800-831-LIFT (5438) | SALES@RGCMARINE.COM
RGCMARINE.COM